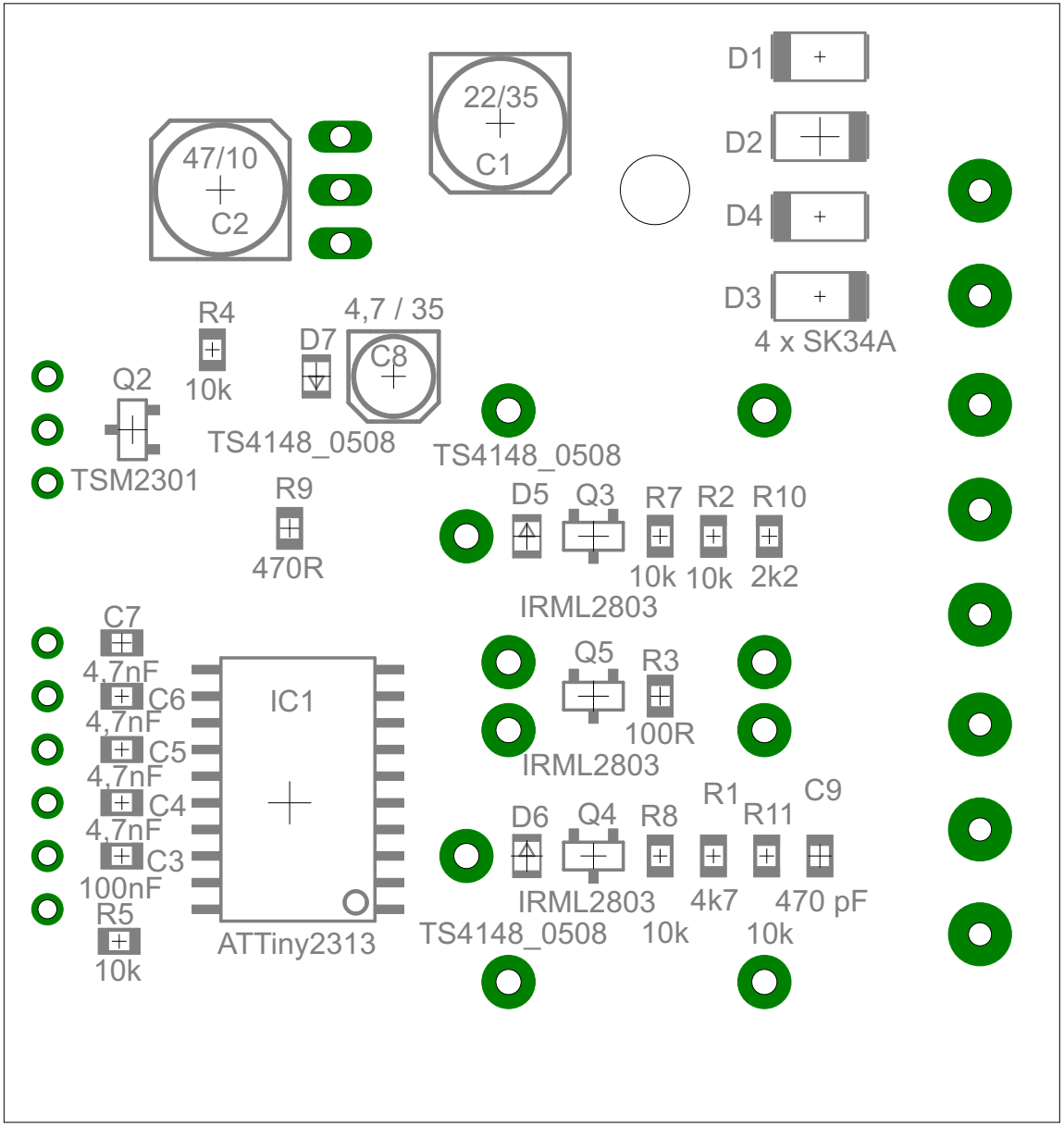
D1
D2
D4
D3
4 x SK34A
22/35
C1
47/10
C2
R4
10k
4,7 / 35
D7
C8
Q2
TSM2301
TS4148_0508
TS4148_0508
R9
470R
D5
Q3
R7
R2
R10
10k
10k
2k2
IRML2803
C7
4,7nF
C6
4,7nF
C5
4,7nF
C4
4,7nF
C3
100nF
R5
10k
IC1
ATTiny2313
Q5
R3
100R
IRML2803
D6
Q4
R8
R1
R11
C9
IRML2803
4k7
470 pF
TS4148_0508
10k
10k